Installation

S19-270C, S19-270E, S19274C, S19274E

Swing-Activated Eyewash and Eye/Face Wash

Douche oculaire et oculaire/faciale activée par bras mobile

Lavador de ojos y de ojos/rostro activado por brazo oscilante

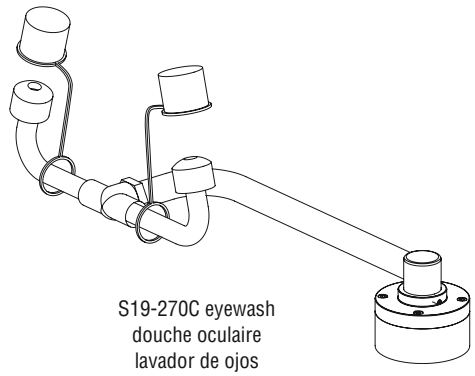

S19-270C eyewash
douche oculaire
lavador de ojos

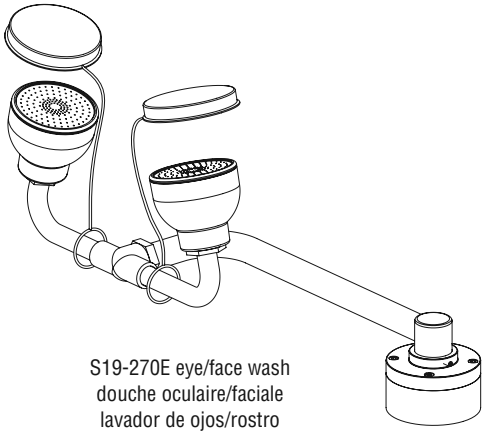

S19-270E eye/face wash
douche oculaire/faciale
lavador de ojos/rostro

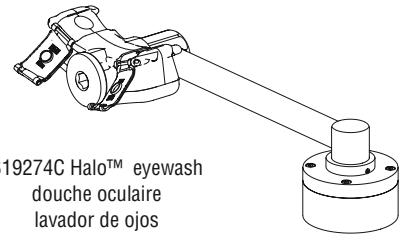

S19274C Halo™ eyewash
douche oculaire
lavador de ojos

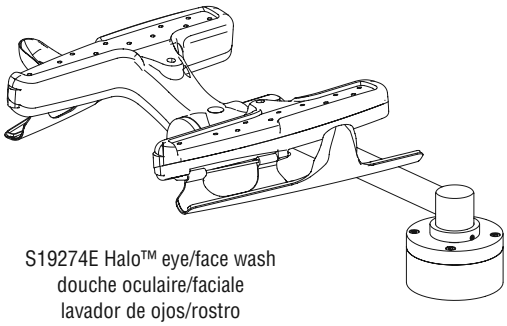

S19274E Halo™ eye/face wash
douche oculaire/faciale
lavador de ojos/rostro

215-1326 Rev. S; ECN 13-05-014
© 2013 Bradley

P.O. Box 309, Menomonee Falls, WI USA 53052-0309
PHONE 800.BRADLEY (800.272.3539) FAX 262.251.5817
bradleycorp.com

Table of Contents

Pre-Installation Information 3
S19-270C, S19274C Dimensions 4
S19-270E, S19274E Dimensions 5
Installation 6–7
Installation Left-Hand Units 8–9
S19-270C Assembly of Components and Parts List 10
S19274C Assembly of Components and Parts List 11
S19-270E Assembly of Components and Parts List 12
S19274E Assembly of Components and Parts List. 13

Table des matières

Avant l'installation 14
S19-270C, S19274C Dimensions 15
S19-270E, S19274E Dimensions 16
Installation 17–18
Installation Gaucher. 19–20
S19-270C Assemblage des composantes et liste des pièces. 21
S19274C Assemblage des composantes et liste des pièces 22
S19-270E Assemblage des composantes et liste des pièces. 23
S19274E Assemblage des composantes et liste des pièces 24

Contenido

Información previa a la instalación 25
S19-270C, S19274C Dimensiones 26
S19-270E, S19274E Dimensiones 27
Instalación 28–29
Instalación de Mano Izquierda. 30–31
S19-270C Armado de los componentes y lista de piezas 32
S19274C Armado de los componentes y lista de piezas 33
S19-270E Armado de los componentes y lista de piezas. 34
S19274E Armado de los componentes y lista de piezas 35

IMPORTANT

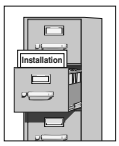

Read this installation manual completely to ensure proper installation, then file it with the owner or maintenance department. Compliance and conformity to drain requirements and other local codes/ordinances is the responsibility of the installer.

Separate parts from packaging and make sure all parts are accounted for before discarding any packaging material. If any parts are missing, do not begin installation until you obtain the missing parts.

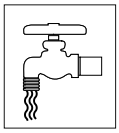

Flush the water supply lines before beginning installation and after installation is complete. Test the unit for leaks and adequate water flow. Main water supply to the eyewash should be "ON" at all times. Provisions shall be made to prevent unauthorized shutoff.

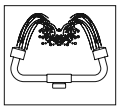

The ANSI Z358.1 standard requires an uninterrupted supply of flushing fluid. Bradley plumbed emergency fixtures require a minimum of 30 PSI (0.21 MPa) flowing pressure. Flushing fluid should be tepid per ANSI Z358.1.

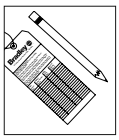

The inspection and testing results of this equipment should be recorded weekly to verify proper operation. This equipment should be inspected annually to ensure compliance with ANSI Z358.1.

Workers who may come in contact with potentially hazardous materials should be trained regarding the placement and proper operation of emergency equipment per ANSI Z358.1.

For questions regarding the operation or installation of this product, visit bradleycorp.com or call 800.BRADLEY (800.272.3539).

Product warranties may also be found under "Products" on our web site at bradleycorp.com.

NOTICE! For classic eye/face wash units, avoid cleaners containing organic solvents, alcohols, and hydrocarbons. Rinse with water after cleaning.

Supplies Required:

- Piping to ½" NPT water supply inlet on unit
- Pipe sealant
- Inlet strainer (recommended)
- Sign-mounting hardware

Local codes may require the installation of a backflow prevention valve to complete proper installation. Compliance with local codes is the responsibility of the installer. Valve must be tested annually to verify that it is functioning properly. Backflow prevention valves are not included with the fixture and may be supplied by the contractor or purchased from Bradley Corporation.

Dimensions — S19-270C

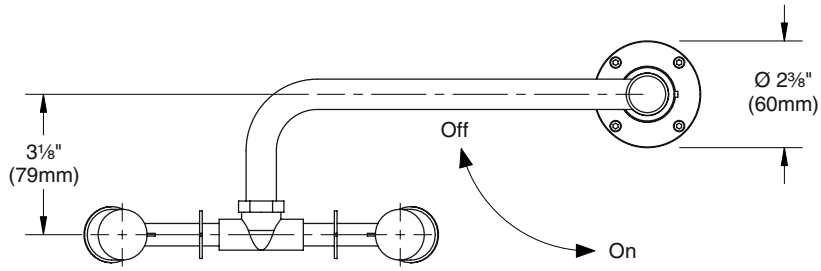

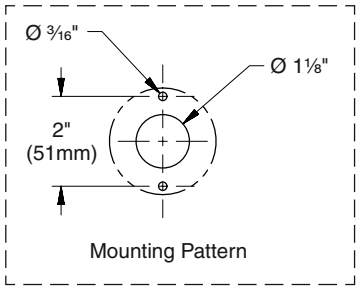

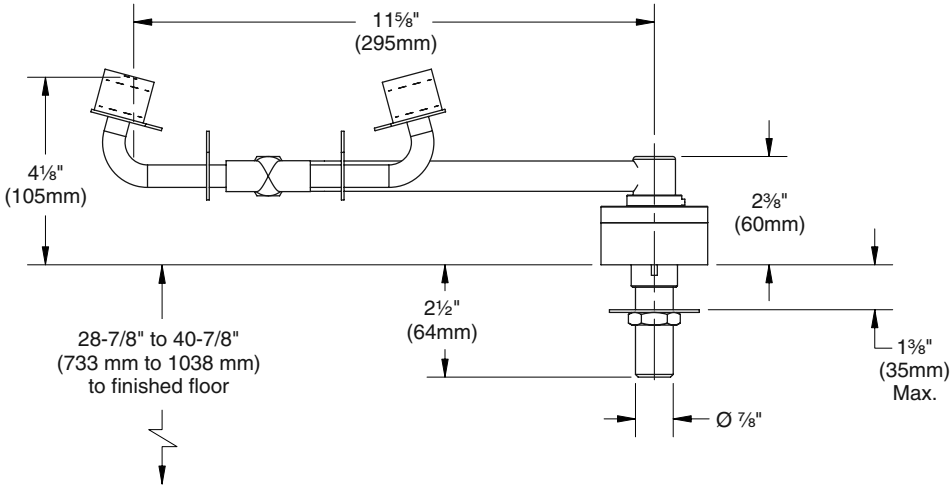

Dimensions — S19274C

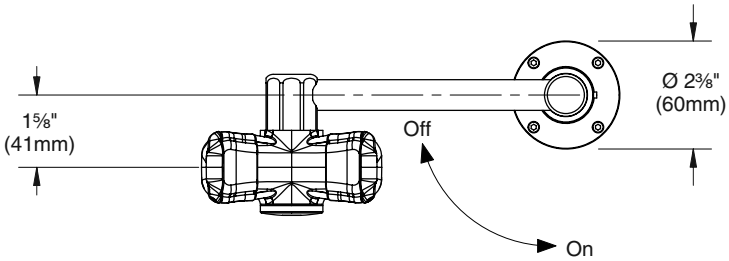

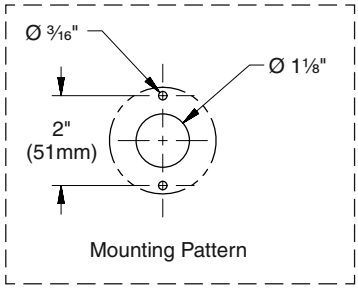

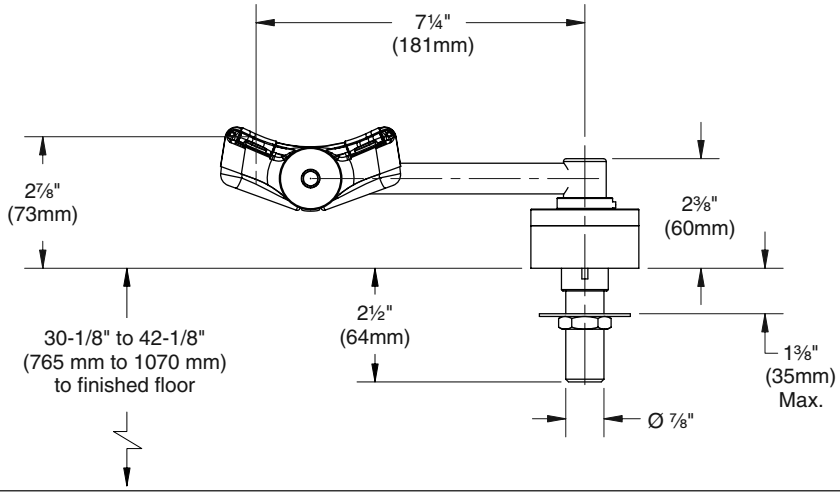

Dimensions — S19-270E

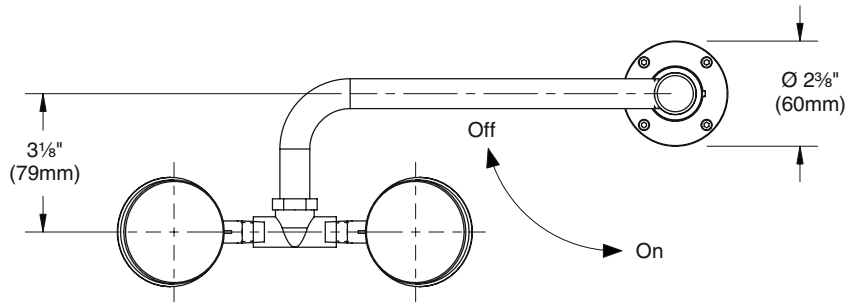

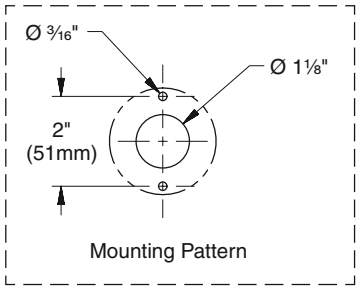

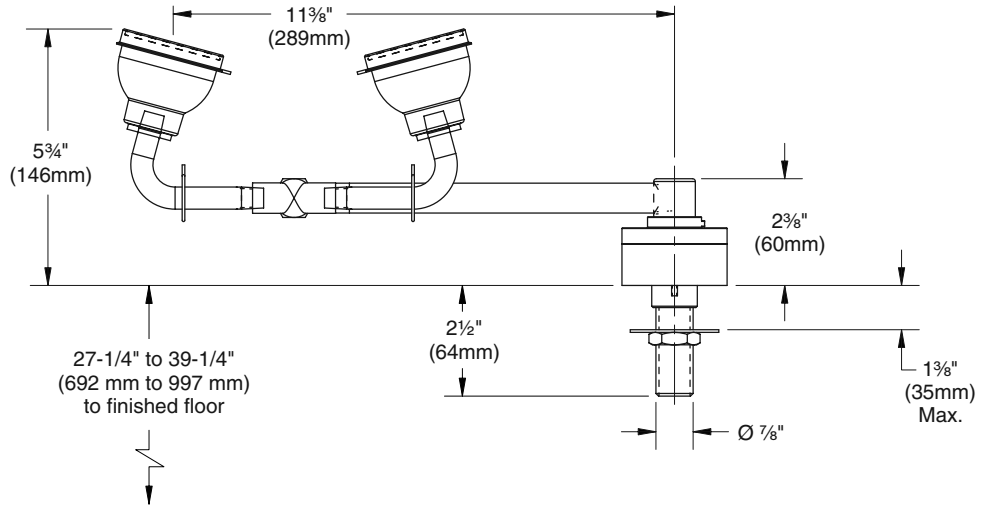

Dimensions — S19274E

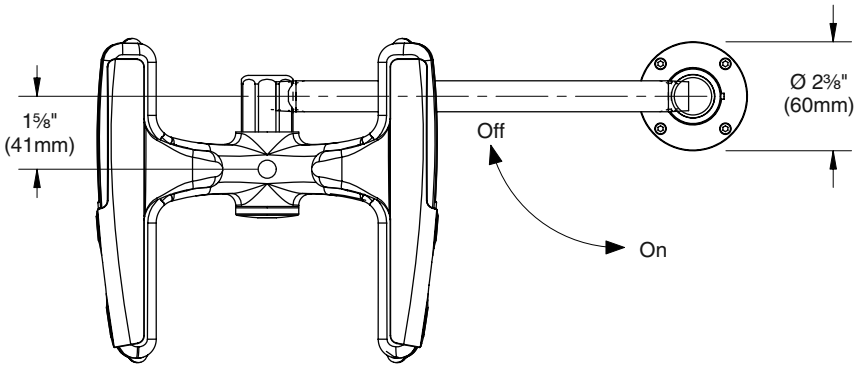

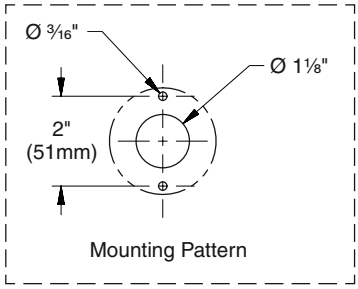

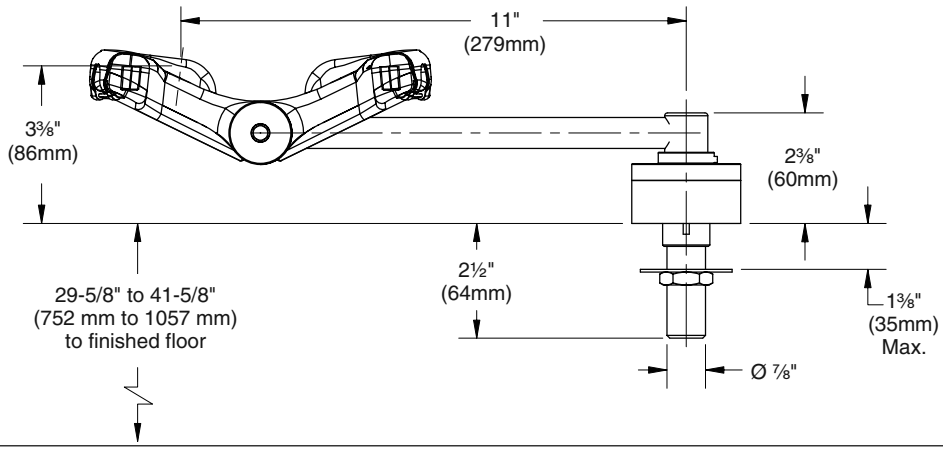

Installation — Eyewash

- ✔ *Halo eyewash right-hand unit is shown on a sample 25" deck. Other units are similar. For classic eyewash installation, refer to the dimensions on page 4 to determine optimal mounting position. Refer to page 8 for left-hand units.*
- ✔ *Minimum dimensions necessary to contain splashing from Halo units are shown.*
- ✔ *Apply pipe sealant (supplied by installer) to all male-threaded pipe joints. The top of the eyewash heads should be positioned a minimum of 33" and a maximum of 45" from the floor and 6" from the nearest obstruction.*

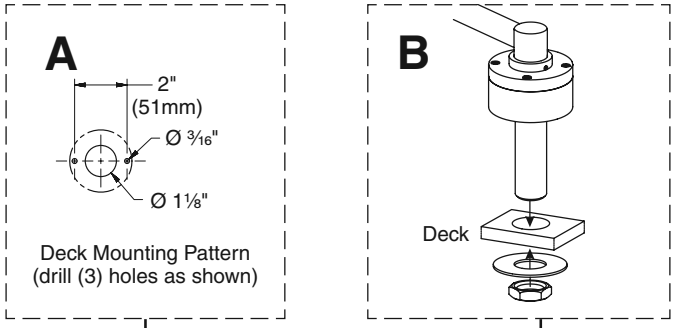

- ✔ *Proper faucet shank/handle clearance and recommended minimum splash containment dimensions must be considered when selecting the desired location for mounting.*

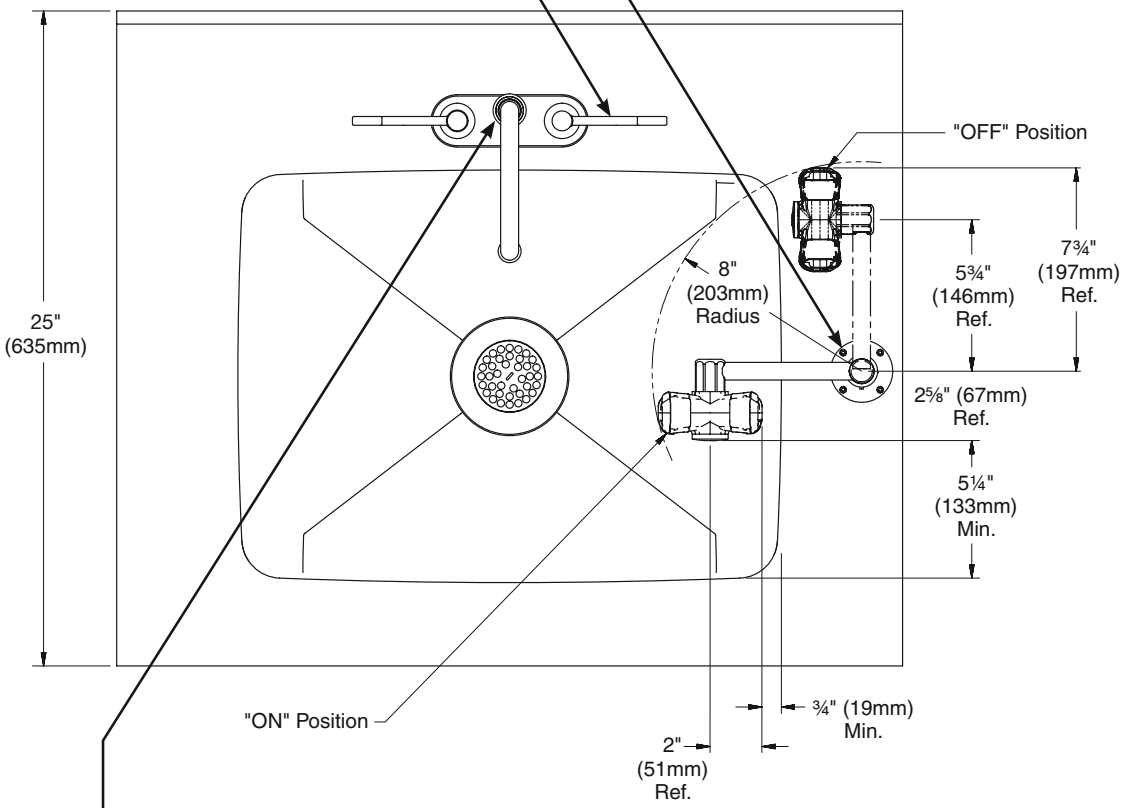

C Connect the water supply using piping (supplied by installer) with ½" NPT female threaded end.

E Slowly open the water supply lines to relieve air and pressurize the valve. Test the unit for leaks and adequate flow.

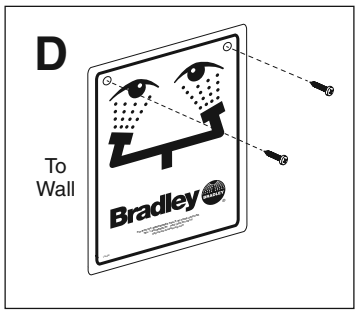

Installation — Eye/Face Wash

- *Halo eye/face wash right-hand unit is shown on a sample 25" deck. Other units are similar. For classic eye/face wash installation, refer to the dimensions on page 5 to determine optimal mounting position. Refer to page 8 for left-hand units.*
- *Minimum dimensions necessary to contain splashing from Halo units are shown.*
- *Apply pipe sealant (supplied by installer) to all male-threaded pipe joints. The top of the eyewash heads should be positioned a minimum of 33" (838mm) and a maximum of 45" (1143mm) from the floor and 6" (152mm) from the nearest obstruction.*

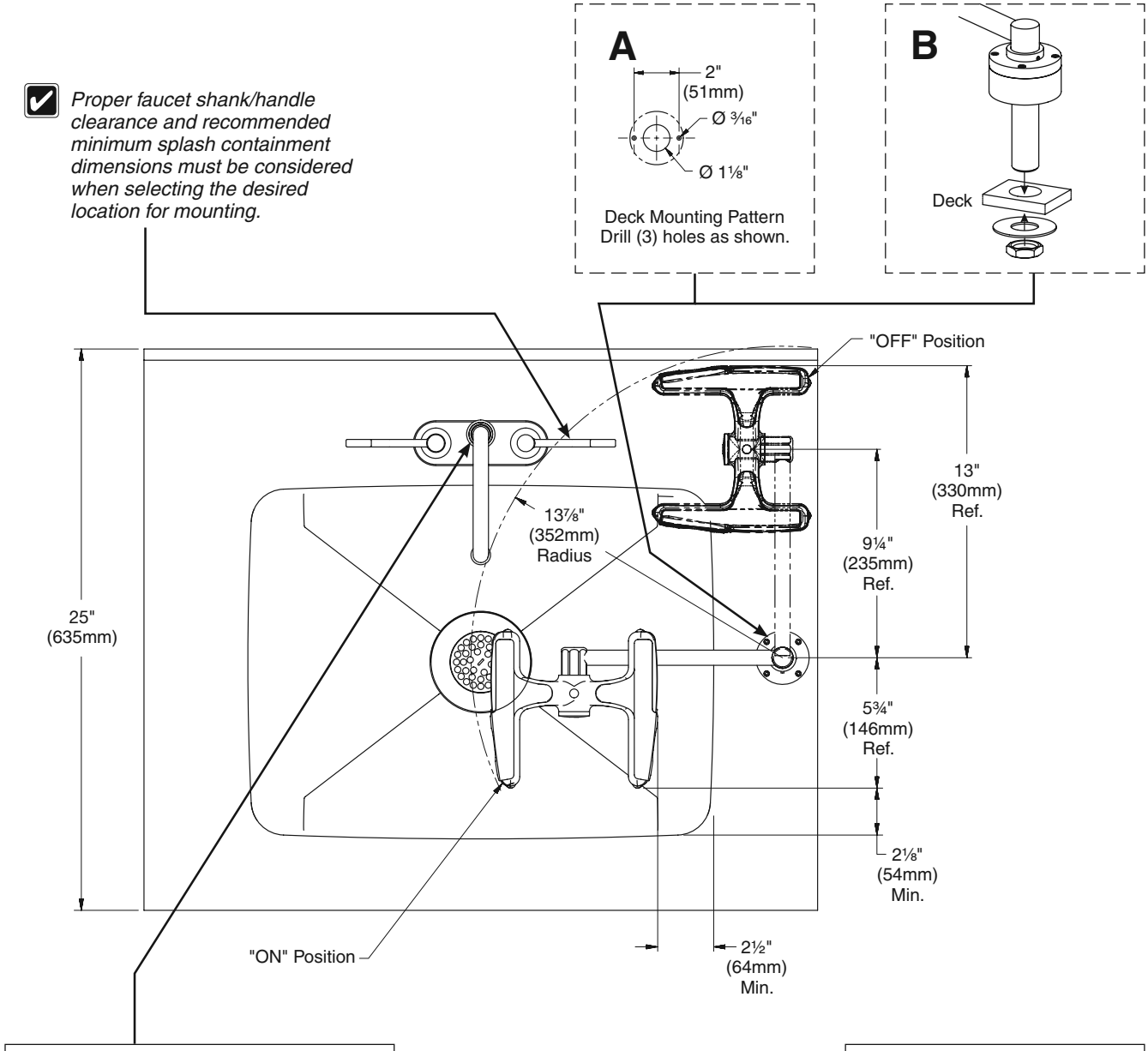

Proper faucet shank/handle clearance and recommended minimum splash containment dimensions must be considered when selecting the desired location for mounting.

C Connect the water supply using piping (supplied by installer) with ½" NPT female threaded end.

D

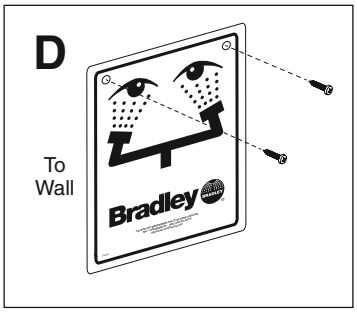

E Slowly open the water supply lines to relieve air and pressurize the valve. Test the unit for leaks and adequate flow.

Installation — Left-Hand Units (Classic)

✔ *Classic eyewash unit is shown. Classic eye/face wash unit is similar.*

✔ *Apply pipe sealant (supplied by installer) to all male-threaded pipe joints.*

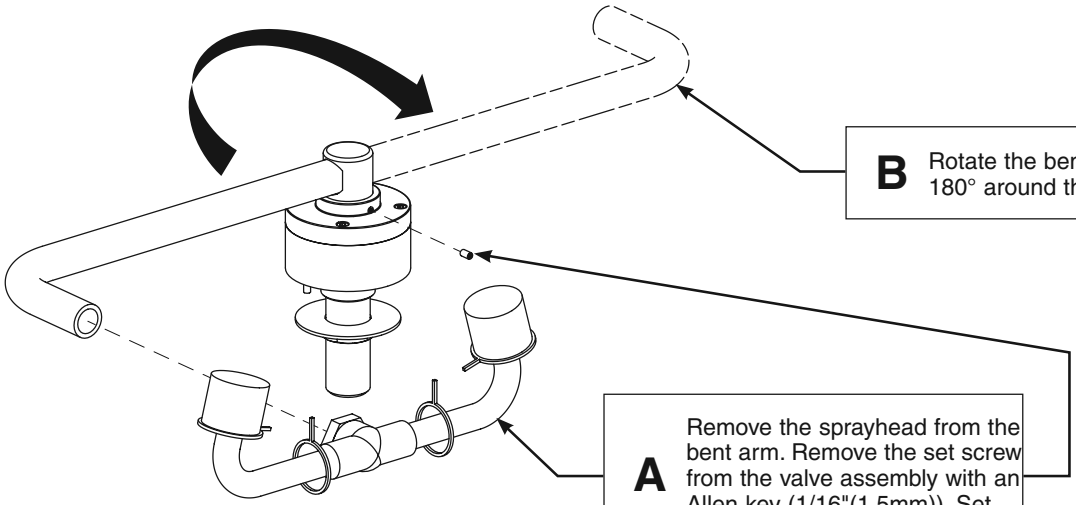

B Rotate the bent arm 180° around the valve.

A Remove the sprayhead from the bent arm. Remove the set screw from the valve assembly with an Allen key (1/16"(1.5mm)). Set the two items aside.

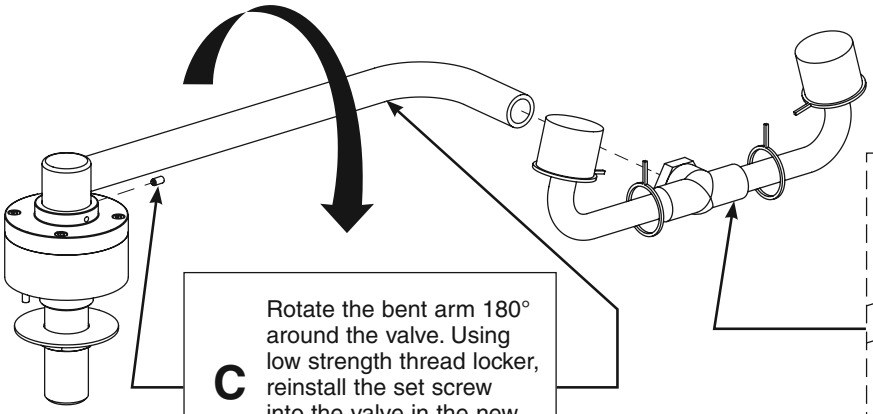

C Rotate the bent arm 180° around the valve. Using low strength thread locker, reinstall the set screw into the valve in the new location shown until it bottoms out, then back off ½ turn.

✔ Arm must swing freely.

D

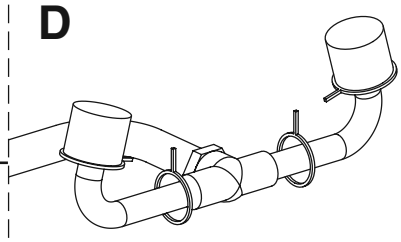

Reattach the sprayhead to the bent arm, resealing as necessary.

E Mount the unit onto the deck. Refer to the instructions on page 6 for eyewash units or page 7 for eye/face wash units.

✔ The left-hand unit must be installed on the left side of the deck.

F Slowly open the water supply lines to relieve air and pressurize the valve. Test the unit for leaks and adequate flow.

Installation — Left-Hand Units (Halo)

✔ *Halo eyewash unit is shown. Halo eye/face wash unit is similar.*

✔ *Apply pipe sealant (supplied by installer) to all male-threaded pipe joints.*

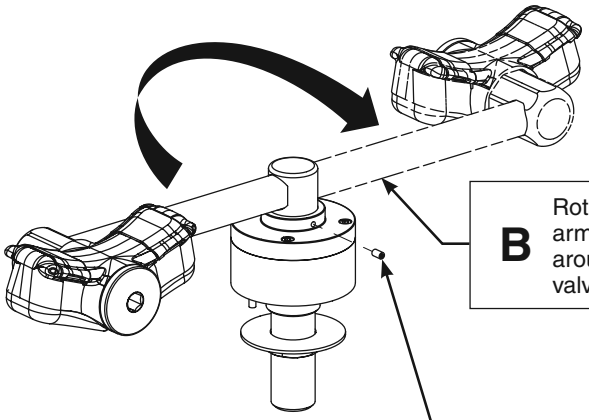

B Rotate the arm 180° around the valve.

A Remove the set screw from the valve assembly with an Allen key (1/16"(1.5mm)) and set aside.

C

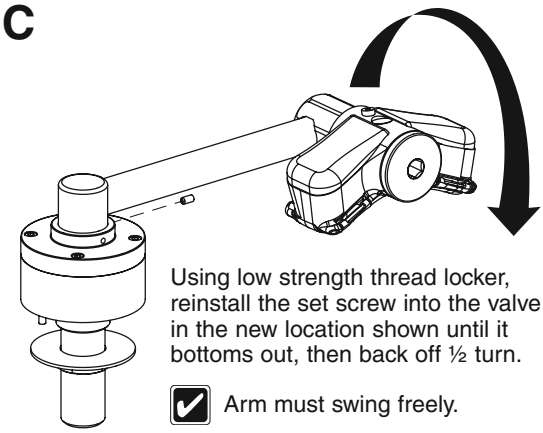

Using low strength thread locker, reinstall the set screw into the valve in the new location shown until it bottoms out, then back off ½ turn.

✔ Arm must swing freely.

Rotate the head and body 180° around the arm.

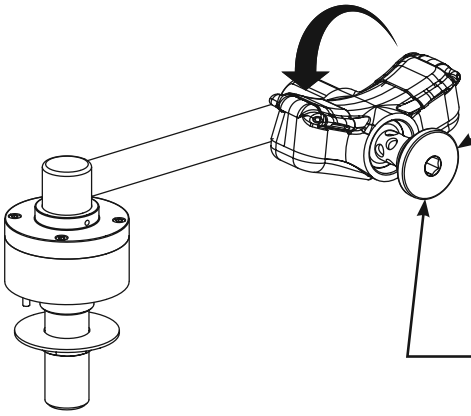

D Loosen the cap assembly with an Allen key (5/16"(8mm)) and rotate the sprayhead 180°.

E

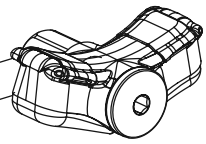

Tighten cap assembly, ensuring head is level.

F Mount the unit onto the deck. Refer to the instructions on page 6 for eyewash units or page 7 for eye/face wash units.

✔ The left-hand unit must be installed on the left side of the deck.

G Slowly open the water supply lines to relieve air and pressurize the valve. Test the unit for leaks and adequate flow.

Assembly of Components and Parts List — S19-270C

Right-hand swivel version is shown in the "ON" position.

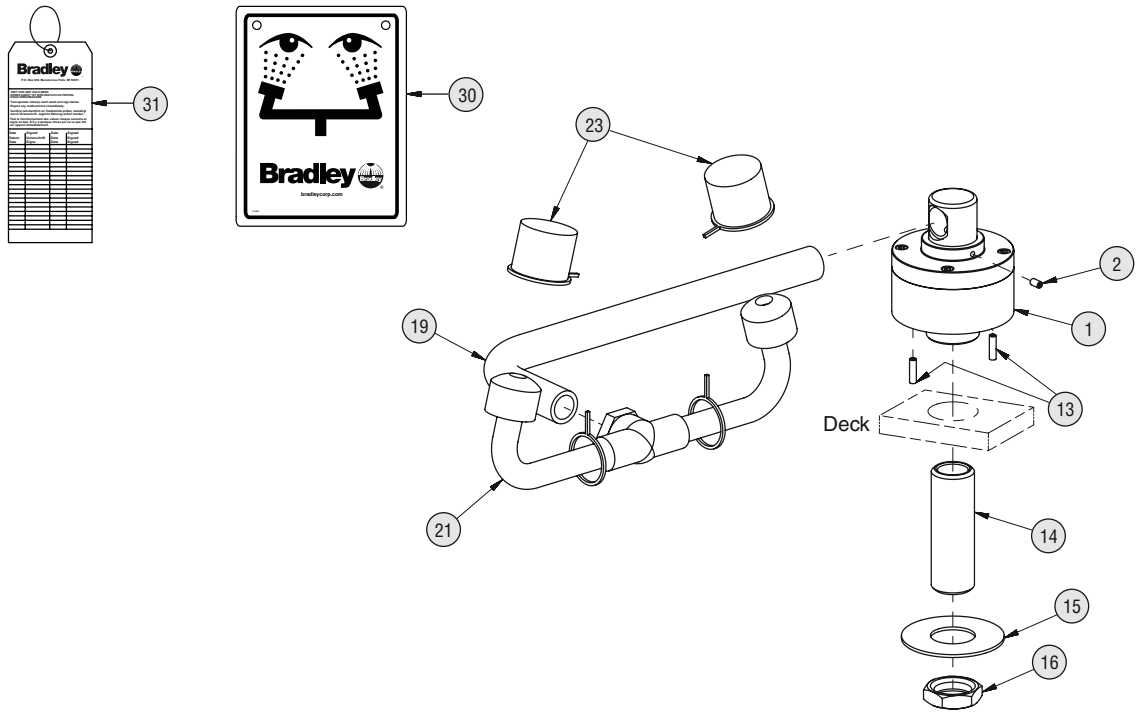

Item	Part No.	Qty	Description
1	S65-385CE	1	Replacement Valve Assembly, Side Swing Classic Eyewash
2	160-473	2	Screw, Set
13	160-474	2	Screw, Set
14	113-514	1	Shank, ½" x 2½"
15	142-002CB	1	Washer, Flat ⅞" x 2"

Item	Part No.	Qty	Description
16	110-115	1	Nut, Brass ½"-14 NPSM
19	113-1032	1	Pipe, Bent Plated
21	S05-092	1	Eyewash Yoke 90°
23	107-371	2	Tethered Dust Cover
30	114-051	1	Safety Sign
31	204-421	1	Emergency Inspection Tag

Assembly of Components and Parts List — S19274C

✔ *Right-hand swivel version is shown in the "ON" position.*

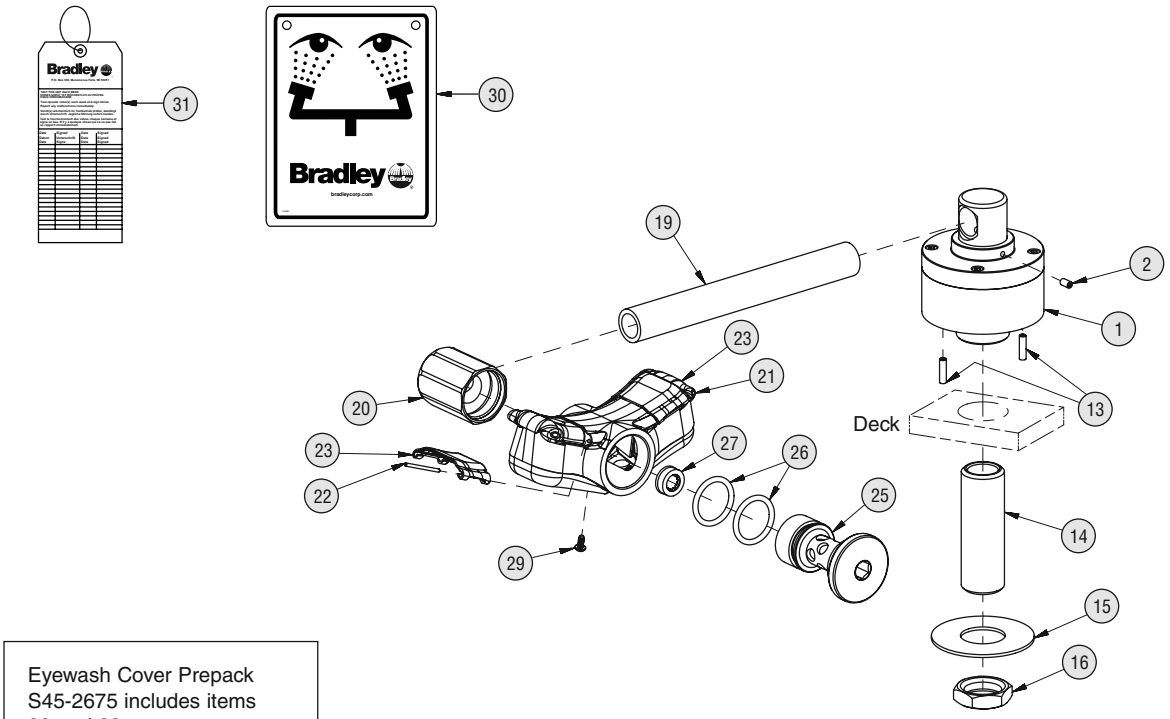

Eyewash Cover Prepack S45-2675 includes items 22 and 23

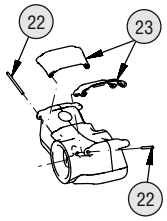

Item	Part No.	Qty	Description	Item	Part No.	Qty	Description
1	S65-385	1	Replacement Valve Assembly, Side Swing	22	in service kit	2	Pivot Pin
2	160-473	2	Screw, Set	23	in service kit	2	Flip Cover, Eyewash
13	160-474	2	Screw, Set	25	115-169	1	Cap, Short
14	113-514	1	Shank, ½" x 2½"	26	125-157	2	O-Ring
15	142-002CB	1	Washer, Flat ⅞" x 2"	27	125-175	1	Flow Control
16	110-115	1	Nut, Brass ½"-14 NPSM	29	160-500	1	Screw, Weep
19	113-1236	1	Pipe, ⅜" x 5½" Chrome Red Brass	30	114-051	1	Safety Sign
20	171-005	1	Body, Mount, Short ⅜" NPT	31	204-421	1	Emergency Inspection Tag
21	S05-190	1	Sprayhead Ass'y Eyewash (includes)				

Assembly of Components and Parts List — S19-270E

Right-hand swivel version is shown in the "ON" position.

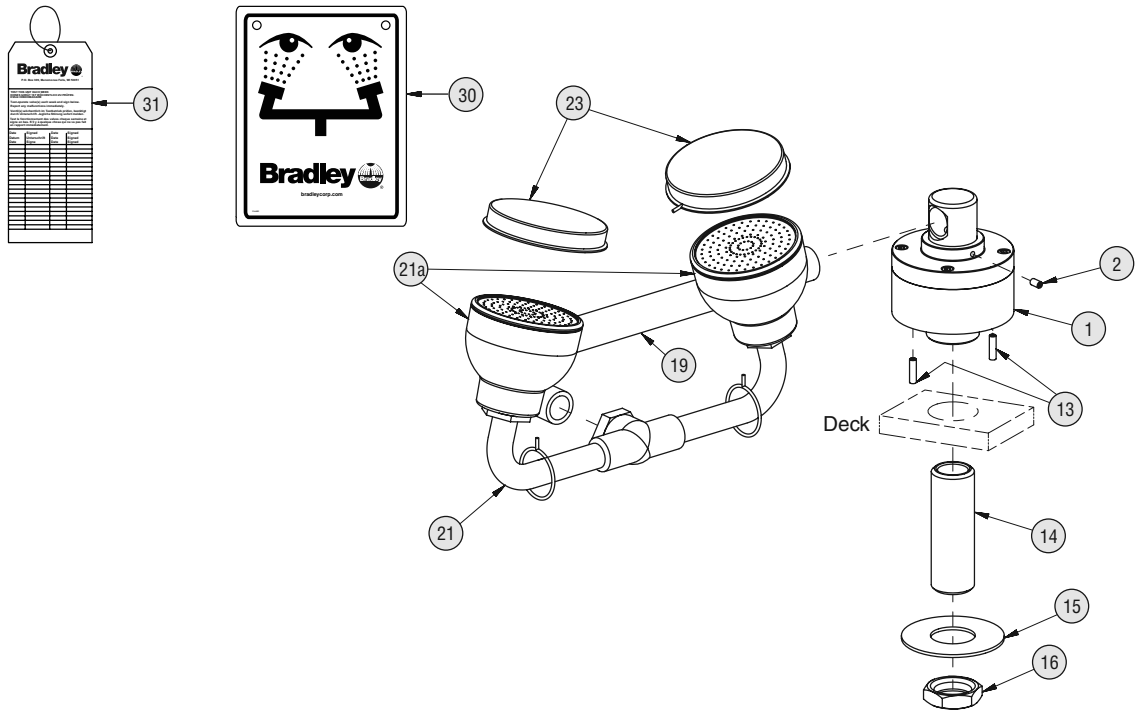

Item	Part No.	Qty	Description
1	S65-385	1	Replacement Valve Assembly, Side Swing
2	160-473	2	Screw, Set
13	160-474	2	Screw, Set
14	113-514	1	Shank, ½" x 2½"
15	142-002CB	1	Washer, Flat ⅞" x 2"
16	110-115	1	Nut, Brass ½"-14 NPSM

Item	Part No.	Qty	Description
19	113-1032	1	Pipe, Bent Plated
21	S05-206	1	Eye/Face Wash Assembly
21A	S45-2453	1	Service Kit EFW - Black Sprayheads
23	S53-063	2	Tethered Dust Cover
30	114-051	1	Safety Sign
31	204-421	1	Emergency Inspection Tag

Assembly of Components and Parts List — S19274E

✔ *Right-hand swivel version is shown in the "ON" position.*

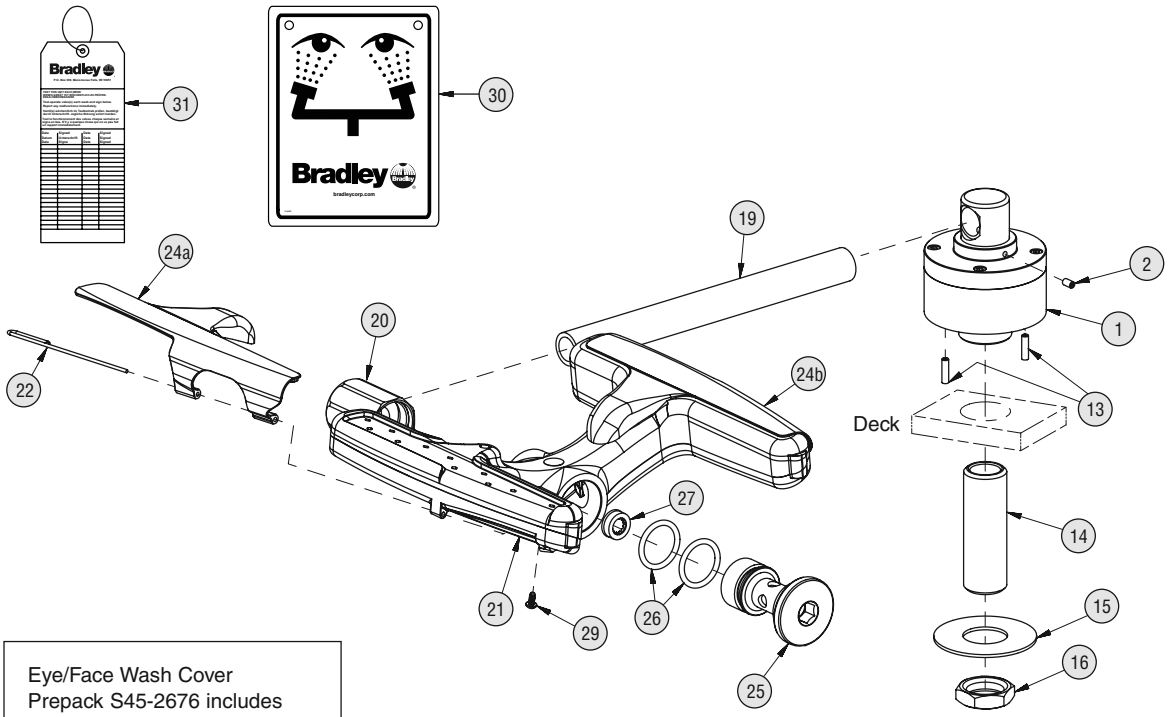

Eye/Face Wash Cover
Prepack S45-2676 includes
items 22, 24a and 24b

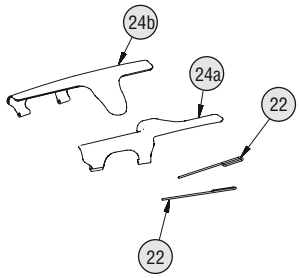

Item	Part No.	Qty	Description
1	S65-385	1	Replacement Valve Assembly, Side Swing
2	160-473	2	Screw, Set
13	160-474	2	Screw, Set
14	113-514	1	Shank, ½" x 2½"
15	142-002CB	1	Washer, Flat ⅞" x 2"
16	110-115	1	Nut, Brass ½"-14 NPSM
19	113-1075	1	Pipe, ⅜" x 9" Chrome Red Brass
20	171-005	1	Body, Mount, Short ⅜" NPT
21	S05-192	1	Sprayhead Ass'y Eye/Face Wash (incl.)

Item	Part No.	Qty	Description
22	in service kit	2	Pivot Pin
24a	in service kit	1	Flip Cover, Right
24b	in service kit	1	Flip Cover, Left
25	115-169	1	Cap, Short
26	125-157	2	O-Ring
27	125-175	1	Flow Control
29	160-500	1	Screw, Weep
30	114-051	1	Safety Sign
31	204-421	1	Emergency Inspection Tag