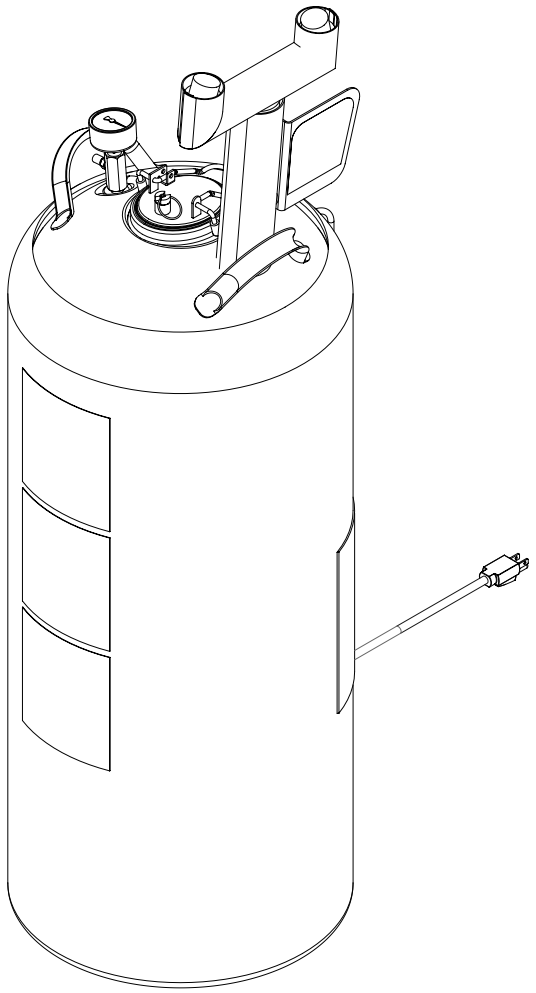

Installation

S19-788H

15-Gallon Tank with Eyewash and Heater Jacket

Réservoir de 15 gallons avec douche oculaire et bande chauffant

Tanque de 15 galones con lavaojos y camisa calentadora

Table of Contents

Pre-Installation Information 2
Dimensions 3
Eyewash Installation 3
Heater Jacket Installation 4
Filling the Tank 5
Maintenance & Troubleshooting 5
Components & Parts List. 6

Table des matières

Avant l'installation 7
Dimensions 8
Installation de la douche oculaire 8
Installation de la chemise de chauffage 9
Remplissage du réservoir 10
Entretien et dépannage 11
Assemblage des composantes et liste des pièces 12

Contenido

Información previa a la instalación 13
Dimensiones 14
Instalación del lavaojos 14
Instalación de la camisa calentadora 15
Llenar el tanque. 16
Mantenimiento y resolución de problemas 17
Montaje de los componentes y lista de piezas 18

215-1416 Rev. P; ECN 12-05-001C

© 2012 Bradley

Bradley

P.O. Box 309, Menomonee Falls, WI USA 53052-0309
PHONE 800.BRADLEY (800.272.3539) FAX 262.251.5817
bradleycorp.com

⚠ WARNING ⚠

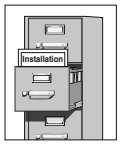

Read this installation manual completely to ensure proper installation, then file it with the owner or maintenance department. Compliance and conformity to drain requirements and other local codes and ordinances is the responsibility of the installer.

Separate parts from packaging and make sure all parts are accounted for before discarding any packaging material. If any parts are missing, do not begin installation until you obtain the missing parts.

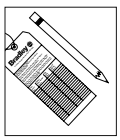

The inspection and testing results of this equipment should be recorded weekly to verify proper operation. This equipment should be inspected annually to ensure compliance with ANSI Z358.1.

Workers who may come in contact with potentially hazardous materials should be trained regarding the placement and proper operation of emergency equipment per ANSI Z358.1.

For questions regarding the operation or installation of this product, visit www.bradleycorp.com or call 800.BRADLEY (800.272.3539).

Product warranties and service parts information may also be found under ”Products” on our web site at www.bradleycorp.com.

Disconnect before servicing. Inspect cord for fraying. Make sure there is no visible damage to the yoke’s electrical system.

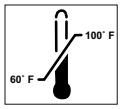

This unit is to be used with tepid, potable water as defined by ANSI Z358.1. (Note: avoid prolonged exposure to ambient heat sources above 100° F, or below 60° F).

Supplies and Tools Required:

- Pipe sealant
- Air pressure equipment or supply (clean and free of oil and contaminants) capable of up to 100 psi.
- Sign-mounting hardware
- Philips-head screwdriver
- Adjustable wrench

Dimensions

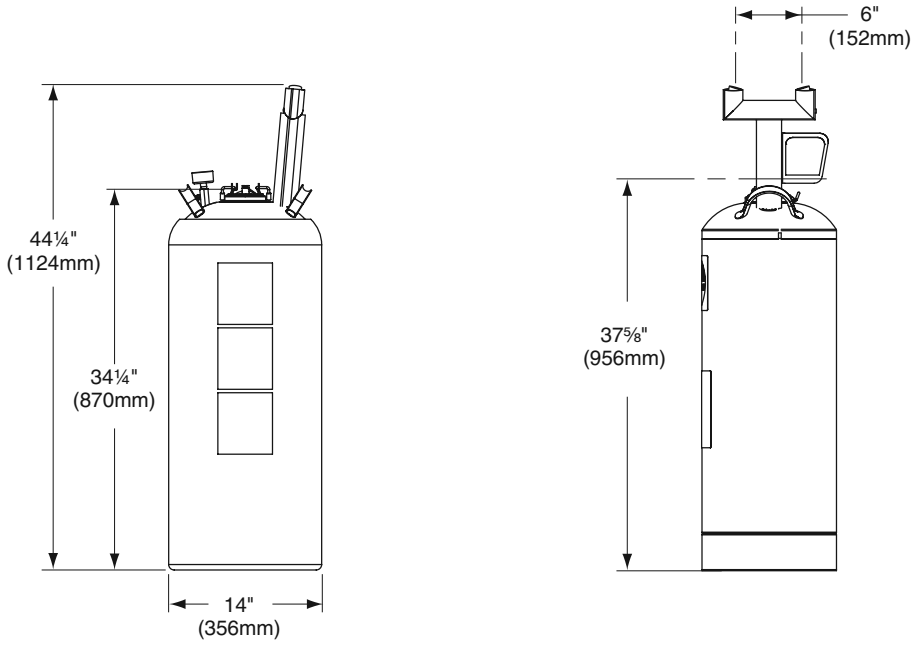

1 Eyewash installation — S19-788H

✔ *Remove the plastic dust plug from the bottom of the yoke assembly and discard.*

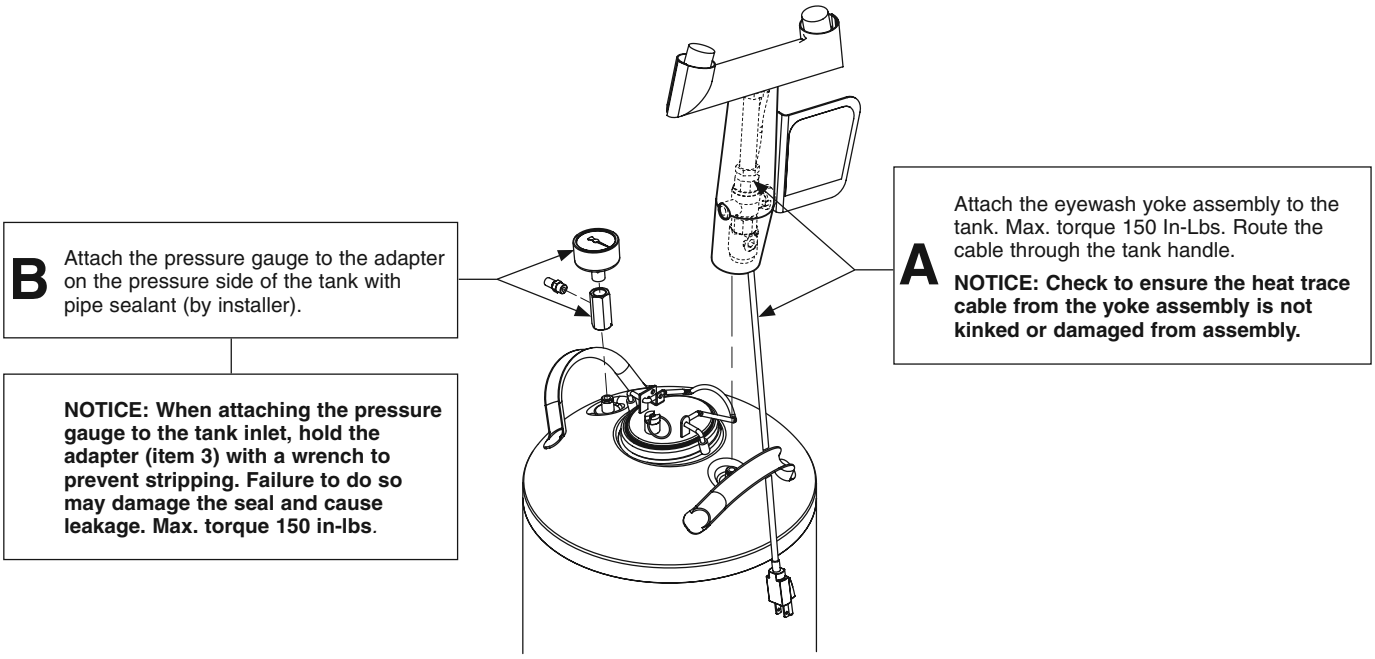

2 Heater Jacket Installation — S19-788H and S19-788HR

Heater Belt

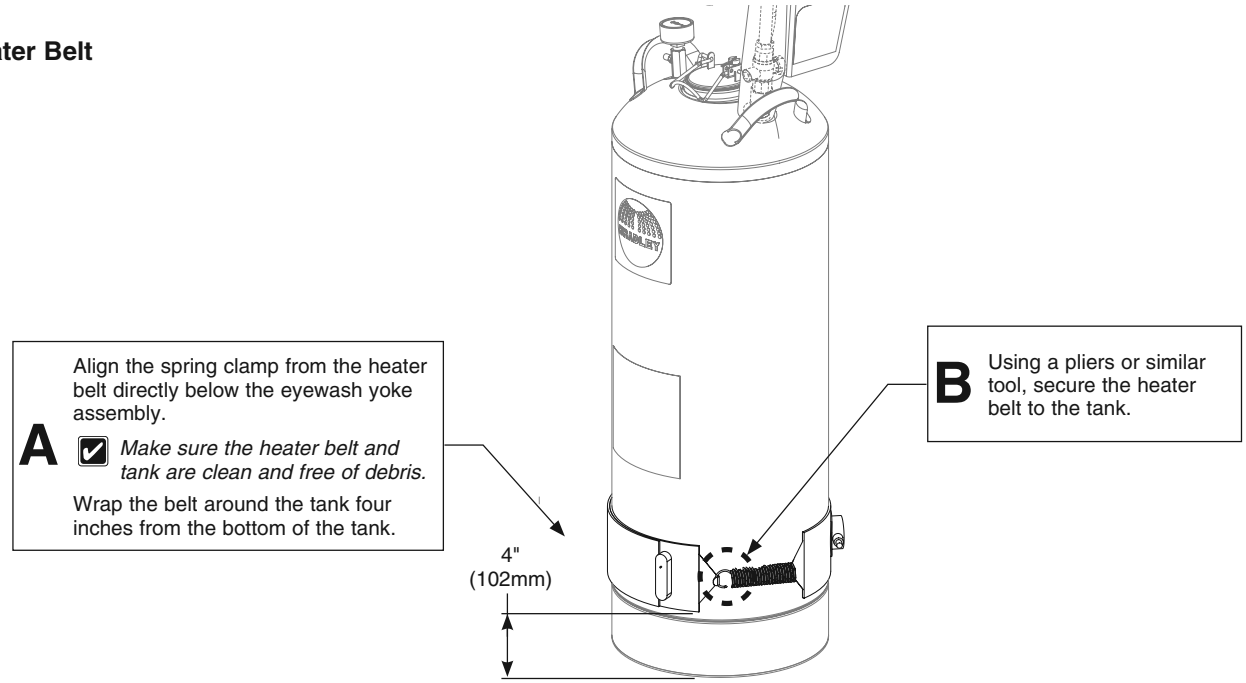

Heater jacket

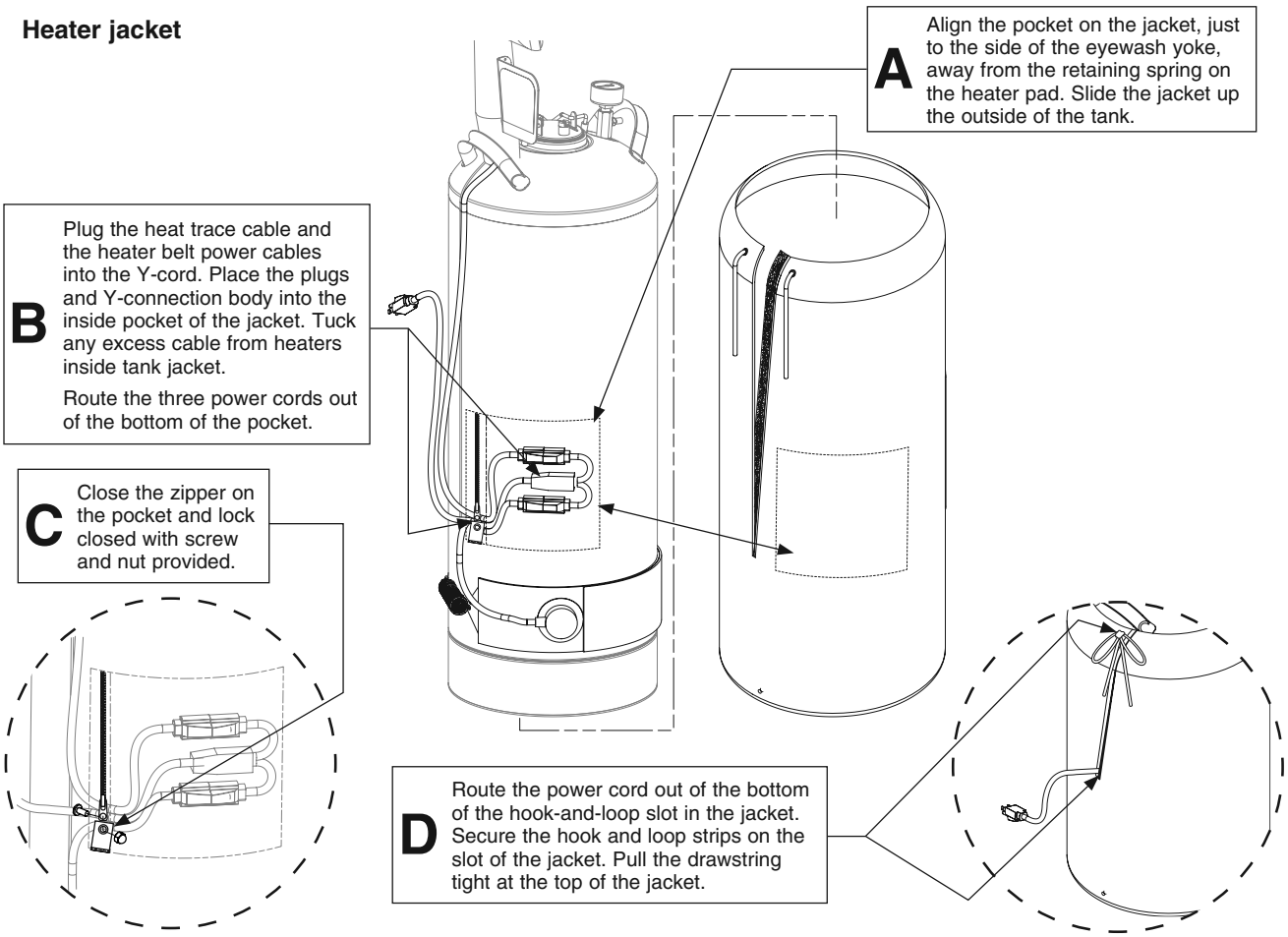

3 Filling the Tank

Fill tank and pressurize

NOTICE: DO NOT open the cover until the pressure gauge reads "0."

1. Open the tank by pulling up on the wire handle located on top of the Quick-lock cover. Push down, rotate and remove. Make sure that the interior of the container is clean. Fill the container with 12 gallons of tepid potable water.
2. Replace the cover and secure by pulling up on the cover and down on the wire handle.
3. After filling the tank with tepid water and before pressurizing the unit, open the activation valve to the full open position and remove the dust covers from the eyewash heads.
4. Located beneath the pressure gauge is an air valve. Remove protective cover and begin to pressurize the unit by applying pressured air through the valve. As soon as water begins discharging from the eyewash, close the activation lever completely. Finish pressurizing the tank to 90 psi and replace the air valves protective cover.

☑ **If this is the initial startup of this unit or if the unit has been unfilled and/or un-pressurized for a prolonged period of time the unit should be flushed out per the procedure below.**

☑ **Prior to placing unit in service let unit stand for one hour. If there is a noticeable pressure drop, re-pressurize and let stand for an additional hour. If unit continues to exhibit pressure loss DO NOT place unit in service and consult the Troubleshooting guide found on page 6 of this manual.**

CAUTION: Relief valve is designed to vent automatically at 100-130 psi to prevent the tank from over pressurizing. If the gauge ever reads more then 130 psi immediately open the pressure relief valve manually by pulling up on the relief valve tab until the pressure reads zero. Remove the unit from service and consult the troubleshooting guide found on page 6 in this manual for steps to correct the problem. Return the unit to service only when over-pressurization issue is corrected.

Flush tank

1. Be sure the unit is assembled, filled and pressurized according to Steps 1 & 3 above, (If this is the initial start up of the unit the body wash spray head will not be attached to the drench hose activation valve at this time.)
2. Discharge the water through the eyewash for at least five minutes to flush the system.
3. Flush all remaining fluid in the tank.
4. Refill the tank and pressurize as described in Step 3 above.
5. Inspect the electrical components for any visible damage or fraying. Plug the heater jacket's electrical cord into an appropriate electrical outlet in accordance with state and local codes.

Maintenance

WARNING: Follow instructions of the preservative manufacturer for the proper use of water preservative.

Inspect eyewash unit

1. Visually inspect the pressure gauge weekly to ensure the unit is maintaining the proper pressure. If the unit is not working properly, remove it from the hazard area immediately and refer to the troubleshooting instructions. For further assistance, contact the Bradley Corporation.

Clean eyewash unit

When using potable water only:

1. Empty the tank any time from once per week to once per month, depending on the quality of your water supply. The manufacturer is not responsible for variations in the water supply.
2. Clean the inside of the tank using warm water and mild soap. Rinse the tank thoroughly with warm water.
3. Refill the eyewash tank with tepid potable water.

When using potable water and water preservative (recommended):

1. Clean the inside of the tank using warm water and mild soap. Rinse the tank thoroughly with warm water.
2. Refill the eyewash tank with tepid potable water. Follow instructions of the preservative manufacturer for the proper use of water preservative.

Troubleshooting

1. If pressure relief valve relieves prior to the required pressure, do the following (when in the unpressurized condition):
   - Tighten the valve completely into the cap by turning the gray hex head portion of the pressure relief valve clockwise. Do not use a wrench.
   - Pull up on the relief valve ring and ensure that the ring is not preventing the valve from closing completely. Push on the center pin of the relief valve to ensure that it is completely closed. Repressurize tank to required pressure. This may have to be done several times to get the valve to seat completely.
2. If the pressurized tank loses pressure over time, check the connections with diluted liquid dish soap or children's bubbles to identify the leak location. Tighten the connection slightly and test again.

Assembly of Components and Parts List

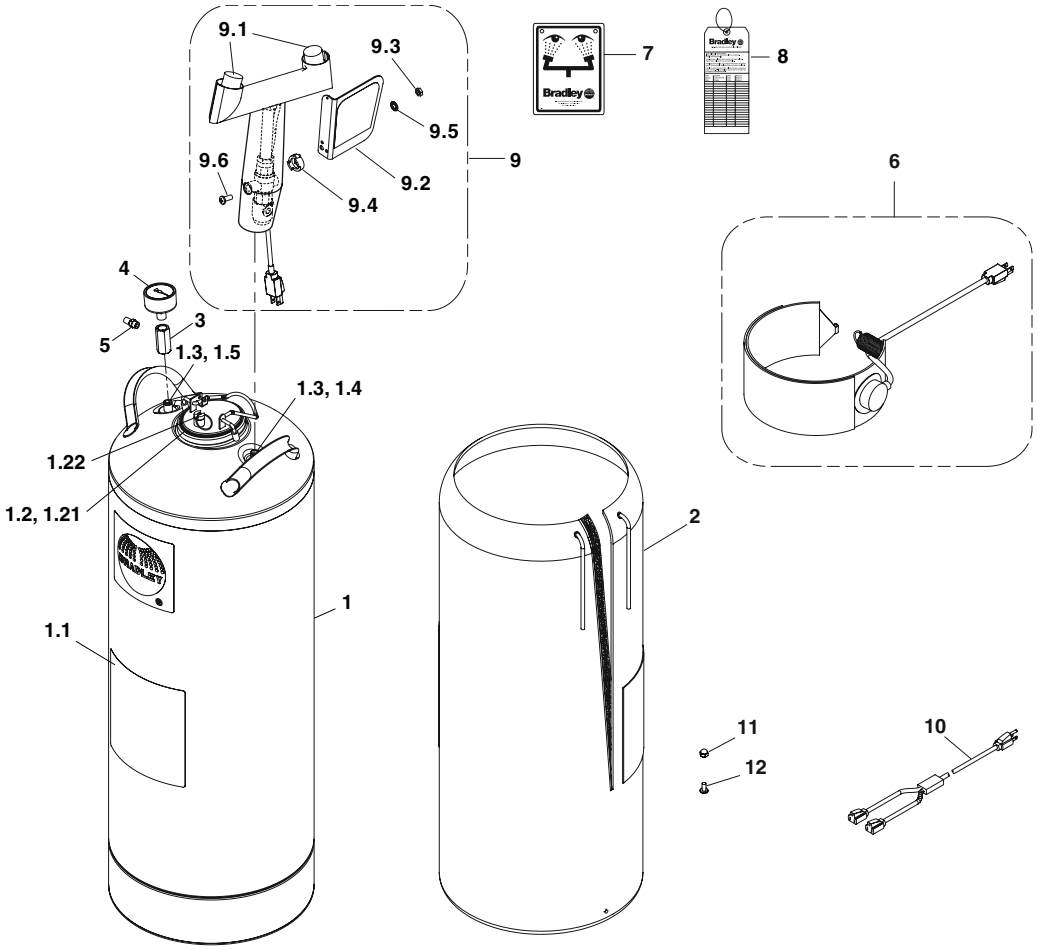

Item	Part No.	Qty.	Description
1	S39-786	1	Tank, 15-Gallon
1.1	204-641	1	Operating Instr. Label, English
1.1	204-641FC	1	Operating Instr. Label, French
1.1	204-641M	1	Operating Instr. Label, Spanish
1.2	S44-024	1	Lid Assembly
1.21	269-1410	1	Gasket
1.22	269-1642	1	Relief Valve
1.3	269-1411	2	O-Ring
1.4	269-1939	1	Draw Tube
1.5	269-1515	1	Level Indicator Tube
2	269-1970	1	Heater Jacket
3	153-451	1	Adapter
4	169-786	1	Pressure Gauge
5	S27-320	1	Tank Valve Assembly

Item	Part No.	Qty.	Description
6	261-011B	1	Heater Belt Assembly
7	114-051	1	Safety Sign
8	204-421	1	Emergency Inspection Tag
9	S05-187	1	Eyewash Assembly, Heated
9.1	107-371	2	Tethered Dust Cover
9.2	S08-336	1	Handle/Label Assembly
9.3	110-215	1	Nut
9.4	153-372R	1	Adapter
9.5	142-002DA	1	Lockwasher
9.6	160-389	1	Screw ½" x ¼"-20
10	251-020	1	Y-cord
11	161-052	1	Nut, Acorn ¼"-20
12	160-389	1	Screw ½" x ¼"-20

S45-2410 includes Items 1.21, 1.3