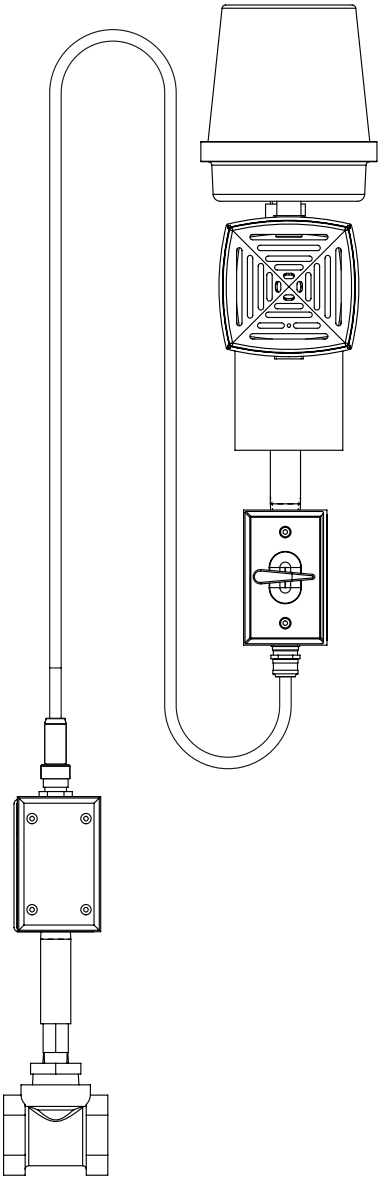

Installation

S19-320

6' cable, câble 6', cable 6'

S19-320C

12' cable, câble 12', cable 12'

Flow Switch Alarm System

Système d'alarme du commutateur de débit

Sistema de alarma de interruptor de flujo

Table of Contents

Pre-Installation Information 2
Assembly of Components 3
Installation 4–5
Testing the Alarm System 6
Troubleshooting 6
Strobe Flashtube Replacement 6
Alarm System Maintenance. 6
Remote Sensing Option. 6

Table des matières

Avant l'installation 7
Assemblage des composantes 8
Installation 9–10
Contrôle du système d'alarme. 11
Dépannage 11
Remplacement du tube de la lampe stroboscopique 11
Entretien du système d'alarme 11
Capteur à distance en option. 11

Contenido

Información previa a la instalación 7
Armado de los componentes. 8
Instalación 9–10
Probar el sistema de alarma 11
Resolución de problemas 11
Reemplazo del tubo de destello de la luz estroboscópica . . 11
Mantenimiento del sistema de alarma. 11
Opción de sensor remoto 11

215-693 Rev. K; ECM 10-05-031

© 2010 Bradley Corporation

P.O. Box 309, Menomonee Falls, WI USA 53052-0309
PHONE 800.BRADLEY (800.272.3539) FAX 262.251.5817
bradleycorp.com

IMPORTANT

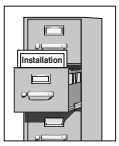

Read this installation manual completely to ensure proper installation, then file it with the owner or maintenance department. Compliance and conformity to drain requirements and other local codes and ordinances is the responsibility of the installer.

Separate parts from packaging and make sure all parts are accounted for before discarding any packaging material. If any parts are missing, do not begin installation until you obtain the missing parts.

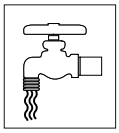

Flush the water supply lines before beginning installation and after installation is complete. Test the unit for leaks and adequate water flow. Main water supply to the eyewash should be "ON" at all times. Provisions shall be made to prevent unauthorized shutoff.

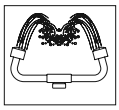

The ANSI Z358.1 standard requires an uninterruptible supply of flushing fluid at a minimum 30 PSI (0.21 MPa) flowing pressure. Flushing fluid should be tepid per ANSI Z358.1.

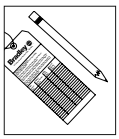

The inspection and testing results of this equipment should be recorded weekly to verify proper operation. This equipment should be inspected annually to ensure compliance with ANSI Z358.1.

Workers who may come in contact with potentially hazardous materials should be trained regarding the placement and proper operation of emergency equipment per ANSI Z358.1.

For questions regarding the operation or installation of this product, visit www.bradleycorp.com or call 1-800-BRADLEY.

Product warranties and parts information may also be found under "Products" on our web site at www.bradleycorp.com.

Power should be supplied to the alarm by no larger than a 120 volt AC, 15 amp branch circuit with a dedicated circuit breaker or fuse and should not supply power to any other device. Compliance and conformity to local codes and ordinances is the responsibility of the installer.

S19-320 and S19-320C Components

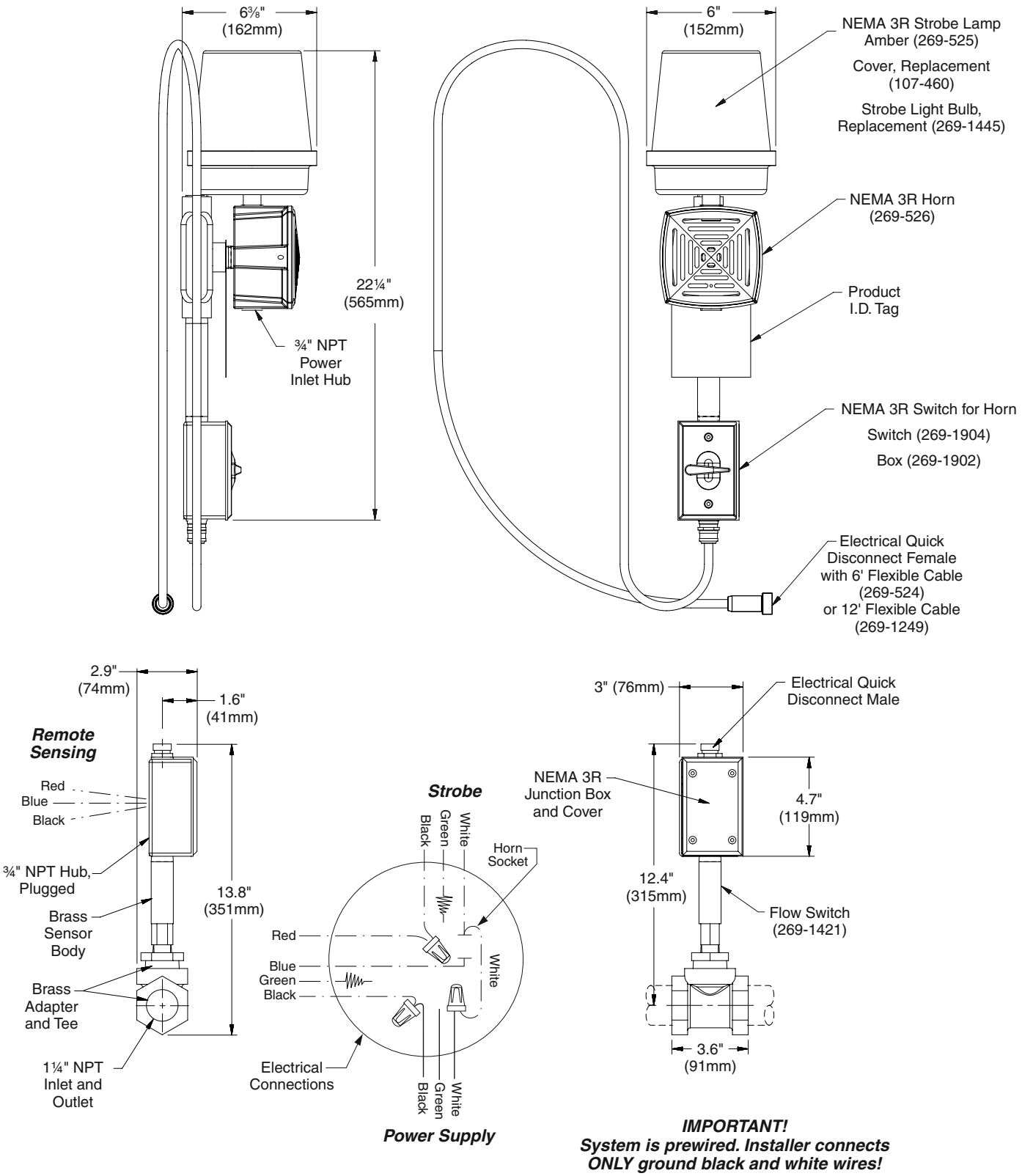

Installation

Supplies Required:

- Teflon tape or pipe sealant
- Black, white and green AWG 18 minimum wire to connect alarm to electric power supply
- ½" conduit and ½" x ¾" adapter bushing for electrical wiring

Step 1: Install the flow switch

NOTE: The flow switch will attach to the mounted alarm via a 6-foot or 12-foot waterproof cable. Keep the location for mounting the alarm in mind when choosing the flow switch location.

1. Choose a location for mounting the flow switch in a horizontal run of the water supply line. The inlet and outlet ports of the flow switch must be a minimum of 6 inches from any tees or elbows in the supply line.
2. Mount the flow switch assembly in the water supply line.
   - The switch body must be in the vertical position with the water pipe horizontal.
   - The water flow must be in the direction marked by the arrow on the flow switch body.
   - Use teflon tape or pipe sealant (supplied by installer) on all water pipe connections.

Step 2: Mount alarm assembly to unit

NOTE: Point the alarm speaker in the direction from which help is most likely to come.

1. Choose a location for mounting the alarm. For best visibility, the alarm should be mounted at least 7' above ground level.
   - The alarm may be mounted directly to the drench shower piping using the supplied U-bolts and nuts.
   - The alarm can also be bolted to a flat surface such as a wall (hardware for this type of installation is NOT supplied).

Step 3: Connect alarm to flow switch

1. Plug the prewired cable into the socket provided in the flow switch junction box. The plug and socket have an alignment pin and groove which makes for error-free hook-up.

NOTE: To prevent water condensation from dripping onto the flow switch, make sure the cable is not taut.

2. Tighten the locking collar on the female cable socket by rotating it clockwise after plugging in. This makes a good watertight connection.

Step 4: Complete electrical supply connections

1. Loosen, but do not remove, the two 5⁄64" hex screws located on the sides of the alarm horn casing. Remove the front grille from the alarm horn to expose the internal wiring.
2. Run electric power conduit (and ¾" x ½" adapter, if necessary) and AWG 18 minimum power wire into the hole in the bottom of the alarm horn casing.

NOTE: Compliance and conformity to local codes and ordinances is the responsibility of the installer.

3. There are three wires inside the alarm horn casing for power supply connections—two for power and one for ground. Using two wire nuts, connect black to black and white to white. Ground as required.
4. Replace the front grille onto the alarm horn casing being sure the prong plugs (that are part of the front grille) line up with the socket slots inside the casing. Tighten the two 5⁄64" hex screws. Test the alarm system.

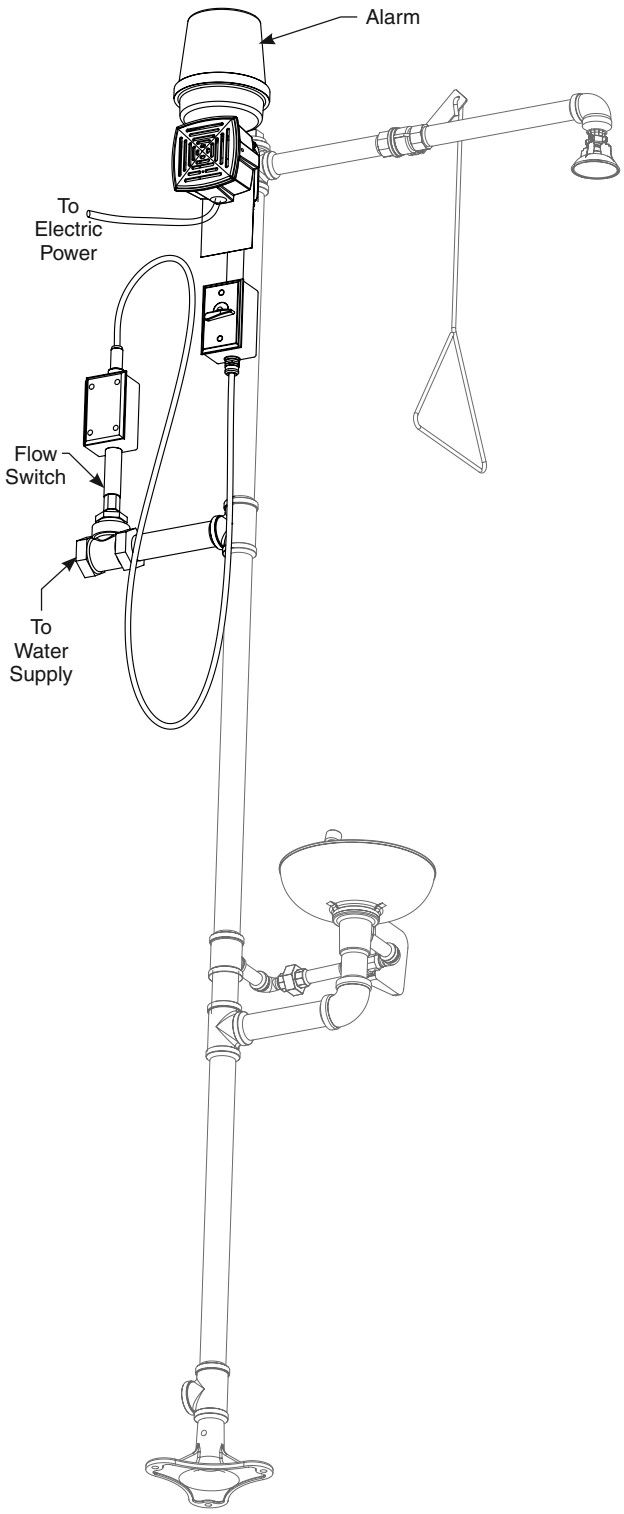

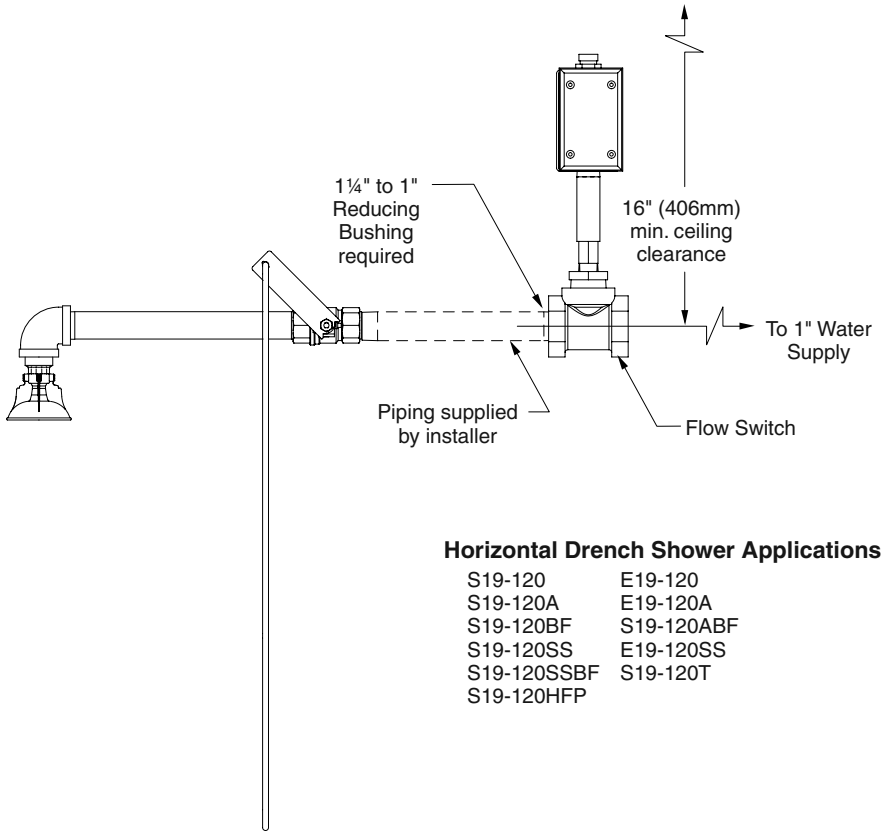

Horizontal Drench Shower Applications

S19-120	E19-120
S19-120A	E19-120A
S19-120BF	S19-120ABF
S19-120SS	E19-120SS
S19-120SSBF	S19-120T
S19-120HFP	

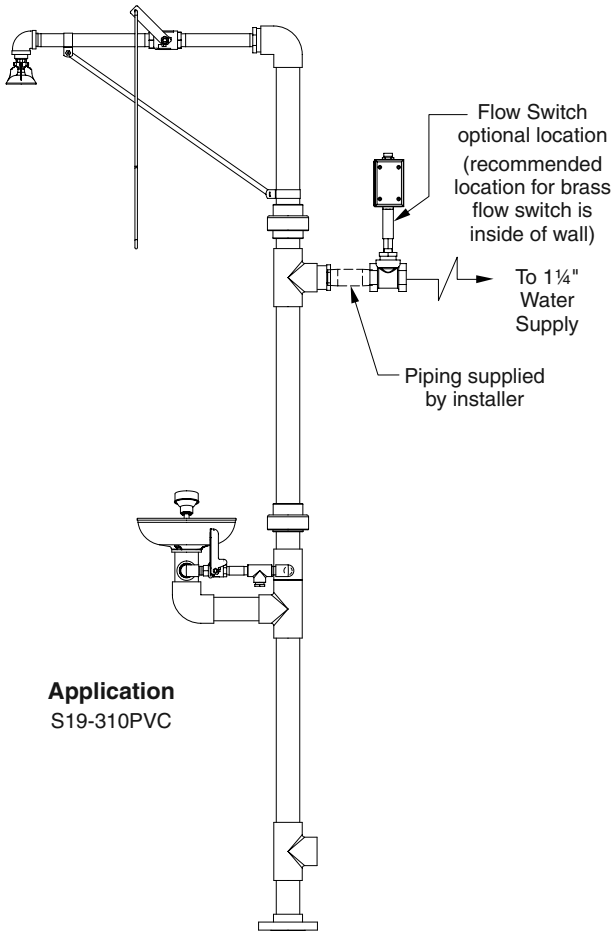

Application
S19-310PVC

Test The Alarm System

NOTE: Testing the alarm for the first time using the drench shower may expose the flow switch to an unnecessary water hammer since the downstream piping may be empty of water. The flow switch is designed to withstand such a water hammer, but using the smaller eyewash flow is recommended.

1. Apply power to the alarm branch circuit. The alarm should remain in the “OFF” position.
2. Make sure the alarm horn cut-out switch is in the “ON” position. This switch is located on the junction box beneath the alarm.
3. Open the eyewash valve. The alarm should sound and the strobe light flash shortly after water flows from the system.
4. Use the alarm horn cut-off switch to silence the horn. Flipping the switch down will shut off the horn but allow the strobe light to keep flashing.
5. Shut off the eyewash flow valve. The strobe light should stop flashing.
6. Reset the alarm horn cut-off switch to its “ON” position.
7. Repeat the tests in procedures 1-6 above, this time using the drench shower only.

NOTE: The alarm system is designed to work properly even if both the eyewash and drench shower are used simultaneously. The alarm will continue to operate so long as either the eyewash or drench shower is still in use.

Troubleshooting

1. If the alarm (horn and strobe light) does not operate when water flows:
   - Check that the circuit breaker or fuse is supplying power to the alarm.
   - Check that the direction of water flow corresponds to the arrow on the flow switch body.
   - Check that water flow is sufficient (4 gallons per minute is required).
   - Check all electrical connections, including the power supply and the quick-connect cable from the alarm to the flow switch.

Strobe flashtube replacement

1. Loosen the locking band and remove the clear plastic dust cover from the top of the strobe light.
2. Loosen (but do not remove) the three screws holding the amber dome in place. Rotate the dome slightly clockwise and remove the dome.
3. Remove the flashtube assembly by simply unplugging it from the top of the strobe light.
4. Replace the flashtube assembly with a new one BUT avoid touching the flashtube glass with your fingers. Be sure the flashtube assembly is firmly plugged into the socket.
5. Reattach and tighten the amber dome.
6. Reattach and tighten the clear dust cover.
7. Test the alarm as described in “Test the Alarm System.”

Alarm system maintenance

The Bradley Alarm System is designed to be virtually maintenance free. An occasional damp cloth wiping of the clear dust cover is all that is needed to ensure maximum visual attention-getting ability.

The alarm horn is factory-set at the loudest possible sound level, 103 decibels at 10 feet. This sound level will attract attention in shop areas with loud background noise levels or at large distances outdoors. If the alarm is used in a more quiet environment or over shorter distances, the sound level is easily adjustable to lower levels (down to 78 decibels at 10 feet) with a simple external adjustment.

- Use 1/16" Allen wrench to adjust the sound to the appropriate alerting level. The adjusting hex screw is located on the front centerline of the horn grille about an inch from the bottom. Turning the hex screw clockwise quiets the horn.

Remote Sensing Option

If remote sensing is wanted, remove the pipe plug from the back of the junction box. Connect the extra black wire (common to both switch arrangements) and the blue wire (normally open switch arrangement) or red wire (normally closed switch arrangement) to your application per local electrical codes. The switch is rated at 5 amps at 120 volts and is isolated from the contacts used by the alarm system. Your connection should be water tight.